HSM — EMC Metal Cable Gland- Metric thread

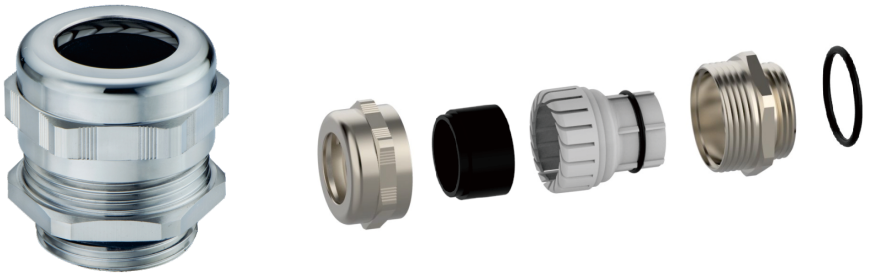

CE RoHs IP68

Shell: Brass with Nickle plating
Clamping ring: PA
Seal: NBR
IP rating: IP68 with specified mating threads and O-ring
Ambient temperature: -40℃ to 100℃
Working temperature: -40℃ to 100℃ in static state, or instantaneous up to 120℃; -20℃ to 80℃ in dynamic state, or instantaneous up to 100℃
Fire resistance: UL94-V2

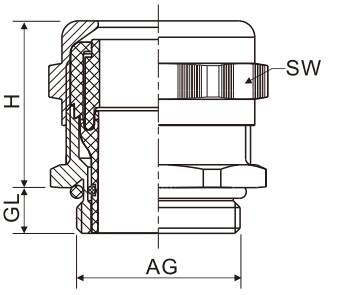

P/N	Thread Size	Cable OD mm	AG mm	GL mm	H mm	SW mm	Reference No.	
HSM.EMC.M12.A	M12×1.5	3-6.5	12.0	6.5	19	14	9 00 022 0120 0	50
HSM.EMC.M12.B	M12×1.5	2-5	12.0	6.5	19	14	9 00 022 0121 0	50
HSM.EMC.M16.A	M16×1.5	5-10	16.0	6	22	20	9 00 022 0160 0	50
HSM.EMC.M16.B	M16×1.5	3-7	16.0	6	22	20	9 00 022 0161 0	50
HSM.EMC.M20.A	M20×1.5	10-14	20.0	6	24	24	9 00 022 0200 0	50
HSM.EMC.M20.B	M20×1.5	7-12	20.0	6	24	24	9 00 022 0201 0	50
HSM.EMC.M25.A	M25×1.5	13-18	25.0	7	26	30	9 00 022 0250 0	20
HSM.EMC.M25.B	M25×1.5	9-16	25.0	7	26	30	9 00 022 0251 0	20
HSM.EMC.M32.A	M32×1.5	18-25	32.0	8	31	40	9 00 022 0320 0	20
HSM.EMC.M32.B	M32×1.5	13-20	32.0	8	31	40	9 00 022 0321 0	20
HSM.EMC.M32.C	M32×1.5	15-21	32.0	8	33	36	9 00 022 0322 0	20
HSM.EMC.M40.A	M40×1.5	22-32	40.0	8	37	50	9 00 022 0400 0	10
HSM.EMC.M40.B	M40×1.5	20-26	40.0	8	37	50	9 00 022 0401 0	10
HSM.EMC.M40.C	M40×1.5	19-27	40.0	8	33	46	9 00 022 0402 0	10
HSM.EMC.M50.A	M50×1.5	32-38	50.0	9	37	57	9 00 022 0500 0	10
HSM.EMC.M50.B	M50×1.5	25-31	50.0	9	37	57	9 00 022 0501 0	10
HSM.EMC.M63.A	M63×1.5	37-44	63.0	10	38	64/68	9 00 022 0630 0	5
HSM.EMC.M63.B	M63×1.5	29- 35	63.0	10	38	64/68	9 00 022 0631 0	5

Recommended accessories:

P92

P112

HSM — EMC Metal Cable Gland- PG thread

CE RoHs IP68

Shell: Brass with Nickle plating
Clamping ring: PA
Seal: NBR
IP rating: IP68 with specified mating threads and O-ring
Ambient temperature: -40℃ to 100℃
Working temperature: -40℃ to 100℃ in static state, or instantaneous up to 120℃; -20℃ to 80℃ in dynamic state, or instantaneous up to 100℃
Fire resistance: UL94-V2

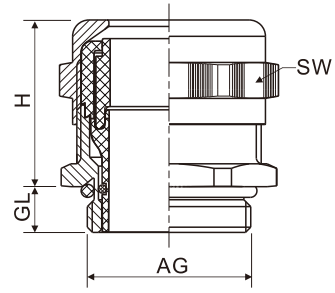

P/N	Thread Size	Cable OD mm	AG mm	GL mm	H mm	SW mm	Reference No.	
HSM.EMC.PG7.A	PG7	3-6.5	12.5	5	19	14	9 00 022 1070 0	50
HSM.EMC.PG7.B	PG7	2-5	12.5	5	19	14	9 00 022 1071 0	50
HSM.EMC.PG9.A	PG9	4-8	15.2	6	21	17	9 00 022 1090 0	50
HSM.EMC.PG9.B	PG9	2-6	15.2	6	21	17	9 00 022 1091 0	50
HSM.EMC.PG11.A	PG11	5-10	18.6	6	22	20	9 00 022 1110 0	50
HSM.EMC.PG11.B	PG11	3-7	18.6	6	22	20	9 00 022 1111 0	50
HSM.EMC.PG13.5.A	PG13.5	6-12	20.4	6.5	24	22	9 00 022 1130 0	50
HSM.EMC.PG13.5.B	PG13.5	5-9	20.4	6.5	24	22	9 00 022 1131 0	50
HSM.EMC.PG16.A	PG16	10-14	22.5	6.5	23	24	9 00 022 1160 0	50
HSM.EMC.PG16.B	PG16	7-12	22.5	6.5	23	24	9 00 022 1161 0	50
HSM.EMC.PG21.A	PG21	13-18	28.3	7	24	30	9 00 022 1210 0	20
HSM.EMC.PG21.B	PG21	9-16	28.3	7	24	30	9 00 022 1211 0	20
HSM.EMC.PG29.A	PG29	18-25	37	8	29	40	9 00 022 1290 0	20
HSM.EMC.PG29.B	PG29	13-20	37	8	29	40	9 00 022 1291 0	20
HSM.EMC.PG36.A	PG36	22-32	47	8	35	50	9 00 022 1360 0	10
HSM.EMC.PG36.B	PG36	20-26	47	8	35	50	9 00 022 1361 0	10
HSM.EMC.PG42.A	PG42	32-38	54	9	37	57	9 00 022 1420 0	10
HSM.EMC.PG42.B	PG42	25-31	54	9	37	57	9 00 022 1421 0	10
HSM.EMC.PG48.A	PG48	37-44	59.3	10	38	64	9 00 022 1480 0	5
HSM.EMC.PG48.B	PG48	29-35	59.3	10	38	64	9 00 022 1481 0	5

Recommended accessories:

P93

P112

DHSM — EMC Metal Cable Gland - Metric thread -Double-lock Type

CE RoHs IP68

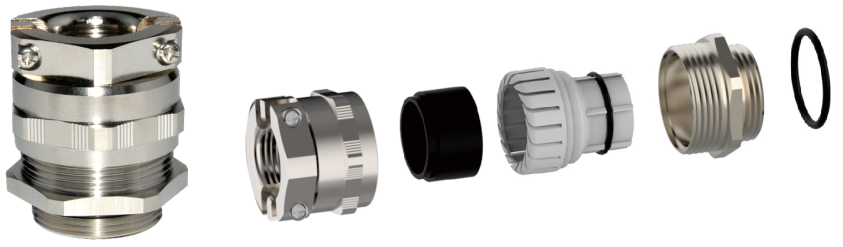

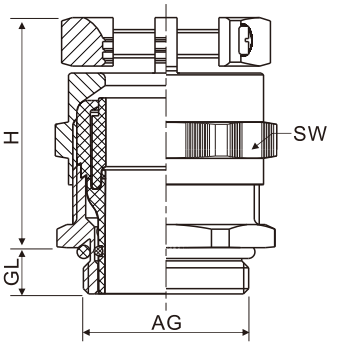

Shell: Brass with Nickle plating
Clamping ring: PA
Seal: NBR
IP rating: IP68 with specified mating threads and O-ring
Ambient temperature: -40℃ to 100℃
Working temperature: -40℃ to 100℃ in static state, or instantaneous up to 120℃; -20℃ to 80℃ in dynamic state, or instantaneous up to 100℃
Fire resistance: UL94-V2

P/N	Thread Size	Cable OD mm	AG mm	GL mm	H mm	SW mm	Reference No.	
DHSM.EMC.M12	M12×1.5	3-6.5	12.0	6.5	26	14	9 00 023 0120 0	50
DHSM.EMC.M16	M16×1.5	6-10	16.0	6	29	20	9 00 023 0160 0	50
DHSM.EMC.M20	M20×1.5	10-14	20.0	6	32	24	9 00 023 0200 0	50
DHSM.EMC.M25	M25×1.5	13-18	25.0	7	35	30	9 00 023 0250 0	20
DHSM.EMC.M32	M32×1.5	18-25	32.0	8	41	40	9 00 023 0320 0	20
DHSM.EMC.M40	M40×1.5	22-32	40.0	8	48	50	9 00 023 0400 0	10
DHSM.EMC.M50.A	M50×1.5	32-38	50.0	9	51	57	9 00 023 0500 0	10
DHSM.EMC.M50.B	M50×1.5	25-31	50.0	9	51	57	9 00 023 0501 0	10
DHSM.EMC.M63.A	M63×1.5	37-44	63.0	10	52	64/68	9 00 023 0630 0	5
DHSM.EMC.M63.B	M63×1.5	29-35	63.0	10	52	64/68	9 00 023 0631 0	5

Recommended accessories:

P92

P112

DHSM — EMC Metal Cable Gland - PG thread-Double-lock Type

CE RoHs IP68

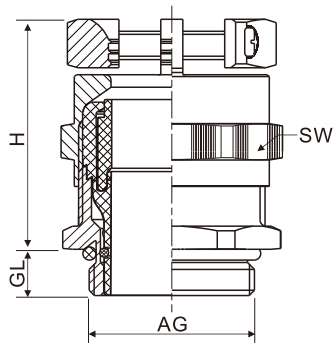

Shell: Brass with Nickle plating
Clamping ring: PA
Seal: NBR
IP rating: IP68 with specified mating threads and O-ring
Ambient temperature: -40℃ to 100℃
Working temperature: -40℃ to 100℃ in static state, or instantaneous up to 120℃; -20℃ to 80℃ in dynamic state, or instantaneous up to 100℃
Fire resistance: UL94-V2

P/N	Thread Size	Cable OD mm	AG mm	GL mm	H mm	SW mm	Reference No.	
DHSM.EMC.PG7	PG7	3-6.5	12.5	5	26	14	9 00 023 1070 0	50
DHSM.EMC.PG9	PG9	4-8	15.2	6	28	17	9 00 023 1090 0	50
DHSM.EMC.PG11	PG11	6-10	18.6	6	29	20	9 00 023 1110 0	50
DHSM.EMC.PG13.5	PG13.5	6-12	20.4	6.5	33	22	9 00 023 1130 0	50
DHSM.EMC.PG16	PG16	10-14	22.5	6.5	32	24	9 00 023 1160 0	50
DHSM.EMC.PG21	PG21	13-18	28.3	7	35	30	9 00 023 1210 0	20
DHSM.EMC.PG29	PG29	18-25	37	8	41	40	9 00 023 1290 0	20
DHSM.EMC.PG36	PG36	22-32	47	8	48	50	9 00 023 1360 0	10
DHSM.EMC.PG42.A	PG42	32-38	54	9	51	57	9 00 023 1420 0	10
DHSM.EMC.PG42.B	PG42	25-31	54	9	51	57	9 00 023 1421 0	10
DHSM.EMC.PG48.A	PG48	37-44	59.3	10	51	64	9 00 023 1480 0	5
DHSM.EMC.PG48.B	PG48	29-35	59.3	10	51	64	9 00 023 1481 0	5

Recommended accessories:

P93

P112