Combined Distribution Boxes

- The distribution boxes can be combined according to your needs
- Patent design

IP rating: IP44 & IP66
Shell material: PC+ABS
Temperature:-40□ ~85□
Colour: Base: Black
Lid: White (Standard)
Yellow (Customized)
Green (Customized)
Mark the customized color behind the part number
YL: yellow, GN: green

Easy Installation · Multiple Combination

Fix the lid by hinge

Inside combining-device for connecting the boxes

Combining-device for connecting the boxes

Screw hole on the bottom of bolt

SOCKET
4 civilian socket 16A 220V 1 TYP5602 16A 220V
PROTECT
5 Miniature circuit breaker 16A 1P
SIZE
450X140X90mm (L×W × H)
P / N
TYP4514-1
IP rating: IP65

SOCKET
8 civilian socket 16A 220V
PROTECT
None
SIZE
450X140X90mm (L×W × H)
P / N
TYP4514-2
IP rating: IP44

SOCKET
3 civilian socket 16A 220V 1 TYP5824 32A 380V
PROTECT
1 Miniature circuit breaker 32A 3P 3 Miniature circuit breaker 16A 1P
SIZE
300X240X160mm (L×W × H)
P / N
TYP3024-1
IP rating: IP65

SOCKET
3 civilian socket 16A 220V 2 TYP5823 32A 380V
PROTECT
None
SIZE
300X240X160mm (L×W × H)
P / N
TYP3024B-1
IP rating: IP44

SOCKET
2 TYP5824 32A 380V 1 TYP5924 63A 380V
PROTECT
2 Miniature circuit breaker 32A 3P 1 Miniature circuit breaker 63A 3P
SIZE
430X240X160mm (L×W × H)
P / N
TYP4324-1
IP rating: IP66

SOCKET
3 civilian socket 16A 220V 2 TYP5823 32A 380V
PROTECT
2 Miniature circuit breaker 32A 3P 3 Miniature circuit breaker 16A 1P
SIZE
430X240X160mm (L×W × H)
P / N
TYP4324-2
IP rating: IP44

SOCKET
3 TYP5602 16A 220V 1 TYP5824 32A 380V 1 TYP5924 63A 380V
PROTECT
1 Miniature circuit breaker 32A 3P 3 Miniature circuit breaker 16A 1P 1 Miniature circuit breaker 63A 3P
SIZE
430X320X160mm (L×W × H)
P / N
TYP4332-1
IP rating: IP66

SOCKET
4 civilian socket 16A 220V 2 TYP5601 16A 220V 2 TYP5823 32A 380V
PROTECT
2 Miniature circuit breaker 32A 3P 6 Miniature circuit breaker 16A 1P
SIZE
430X320X160mm (L×W × H)
P / N
TYP4332-2
IP rating: IP44

SOCKET

4 TYP5824 32A 380V

PROTECT

1 Miniature circuit breaker 125A 4P
4 Miniature circuit breaker 32A 3P

SIZE

Coalition 2 300X240X160mm (L x W x H)

P / N

TYP3048

IP rating: IP66

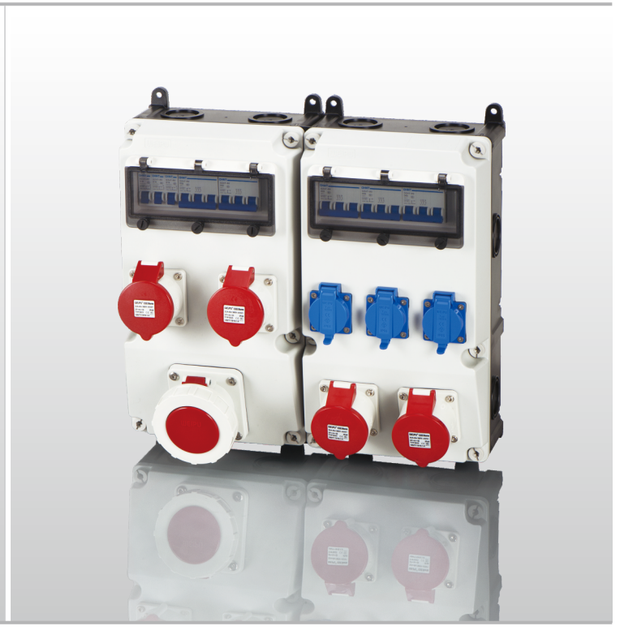

SOCKET

3 civilian socket 16A 220V
4 TYP5823 32A 380V
1 TYP5924 63A 380V

PROTECT

1 Miniature circuit breaker 16A 1P
4 Miniature circuit breaker 32A 3P
1 Miniature circuit breaker 63A 3P

SIZE

Coalition 2 430X240X160mm (L x W x H)

P / N

TYP4348

IP rating: IP44

SOCKET

4 civilian socket 16A 220V
4 TYP5824 32A 380V
1 TYP5924 63A 380V

PROTECT

4 Miniature circuit breaker 16A 1P
4 Miniature circuit breaker 32A 3P
1 Miniature circuit breaker 63A 3P

SIZE

Coalition 1 430X240X160mm (L x W x H)
1 430X320X160mm (L x W x H)

P / N

TYP4356

IP rating: IP65

SOCKET

4 TYP5824 32A 380V

PROTECT

1 Miniature circuit breaker 100A 1P
2 Miniature circuit breaker 16A 3P
2 Miniature circuit breaker 32A 3P

SIZE

Coalition 2 300X240X160mm (L x W x H)

P / N

TYP6024

IP rating: IP66

SOCKET

3 civilian socket 16A 220V
2 TYP5824 32A 380V
1 TYP5924 63A 380V

PROTECT

1 Miniature circuit breaker 125A 4P
1 Miniature circuit breaker 63A 3P
2 Miniature circuit breaker 32A 3P
3 Miniature circuit breaker 16A 1P

SIZE

Coalition 1 430X240X160mm (L x W x H)
1 300X240X160mm (L x W x H)

P / N

TYP7324

IP rating: IP65

插座

3 civilian socket 16A 220V
2 TYP5824 32A 380V
2 TYP5924 63A 380V

PROTECT

1 Molded case circuit breaker 125A 6P
2 Miniature circuit breaker 63A 3P
2 Miniature circuit breaker 32A 3P
3 Miniature circuit breaker 32A 1P

SIZE

Coalition 4 300X240X160mm (L x W x H)

P / N

TYP6048

IP rating: IP65

SOCKET

3 civilian socket 16A 220V
2 TYP5601 16A 220V
4 TYP5801 32A 220V
2个 TYP5823 32A 380V
1个 TYP5924 63A 380V

PROTECT

1 Molded case circuit breaker 125A 6P
1 Miniature circuit breaker 63A 3P
4 Miniature circuit breaker 32A 1P
2 Miniature circuit breaker 32A 3P
5 Miniature circuit breaker 16A 1P

SIZE

Coalition 2 430X240X160mm (L x W x H)
2 300X240X160mm (L x W x H)

P / N

TYP7348

IP rating: IP44

Combined Distribution Boxes

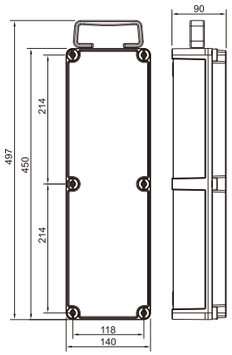

P/N
TYP4514
SIZE
450X140X90mm (L x W x H)
IP rating: IP66

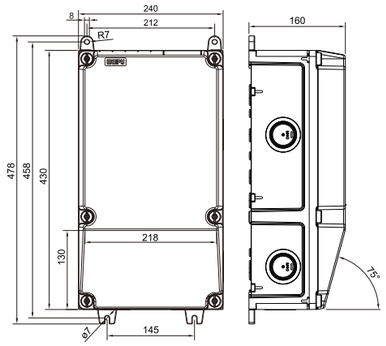

P/N
TYP4324
SIZE
430X240X160mm (L x W x H)
IP rating: IP66

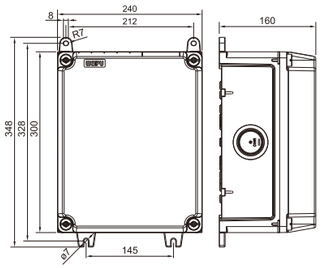

P/N
TYP3024
SIZE
300X240X160mm (L x W x H)
IP rating: IP66

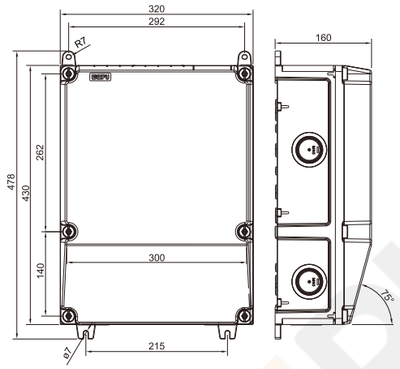

P/N
TYP4332
SIZE
430X320X160mm (L x W x H)
IP rating: IP66

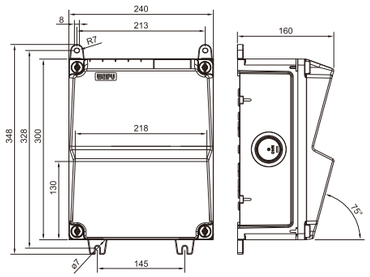

P/N
TYP3024B
SIZE
300X240X160mm (L x W x H)
IP rating: IP66

Hanging Distribution Box

IP rating: IP44 & IP66
Shell material: PC+ABS
Temperature: -40℃ ~ 85℃
Colour: Base: Black
Lid: White (Standard)
Yellow (Customized)
Green (Customized)
Mark the customized color behind the part number
YE: yellow, GN: green

Fix the lid by hinge

Optional nozzel for compressed air

Can hang it up or put on floor

SOCKET	SOCKET	SOCKET
7 civilian socket 16A 220V 2 TYP5623 16A 380V 1 TYP3602 16A 220V	6 civilian socket 16A 220V 1 TYP5601 16A 220V 1 TYP5623 16A 380V 2 TYP5823 32A 380V	3 civilian socket 16A 220V 2 TYP5801 32A 220V 1 TYP3601 16A 220V 1 TYP3823 32A 380V
PROTECT	**PROTECT**	**PROTECT**
7 Miniature circuit breaker 16A 1P 1 Miniature circuit breaker 32A 3P	None	4 Miniature circuit breaker 16A 1P 2 Miniature circuit breaker 32A 1P 1 Miniature circuit breaker 32A 3P
SIZE	**SIZE**	**SIZE**
322X243X220mm (L×W × H)	322X243X220mm (L×W × H)	322X243X220mm (L×W × H)
P / N	**P / N**	**P / N**
TYPD3224-1	TYPD3224-2	TYPD3224-3
IP rating: IP65	IP rating: IP44	IP rating: IP44

SOCKET	SOCKET	SOCKET
5 TYP3624 16A 380V	2 civilian socket 16A 220V 2 TYP3823 32A 380V	3 TYP3823 32A 380V
PROTECT	**PROTECT**	**PROTECT**
None	None	None
SIZE	**SIZE**	**SIZE**
180X180X155mm (L×W× H)	180X180X155mm (L×W× H)	180X180X155mm (L×W× H)
P / N	**P / N**	**P / N**
TYPD1815-1	TYPD1815-2	TYPD1815-3
IP rating: IP66	IP rating: IP44	IP rating: IP44

SOCKET	SOCKET	SOCKET
3 TYP5823 32A 380V	1 civilian socket 16A 220V 1 TYP5824 32A 380V 1 TYP5602 16A 220V	2 civilian socket 16A 220V 1 TYP5823 32A 380V
PROTECT	**PROTECT**	**PROTECT**
None	None	None
SIZE	**SIZE**	**SIZE**
284X147mm (L×W× H)	284X147mm (L×W× H)	284X147mm (L×W× H)
P / N	**P / N**	**P / N**
TYPD2814-1	TYPD2814-2	TYPD2814-3
IP rating: IP44	IP rating: IP65	IP rating: IP44

Distribution Box With Cable Reel

IP rating: IP44
Cable reel material and P/N: CRS cable reel: 38SP
PC: 33PP
Temperature: -25℃ ~ 85℃

SOCKET	SOCKET	SOCKET
2 TYP5823 32A 380V 1 TYP645 63A 380V	2 TYP5601 16A 220V 1 TYP281 32A 220V	4 civilian socket 16A 220V 1 TYP231 16A 220V
PROTECT	**PROTECT**	**PROTECT**
1 Miniature circuit breaker 63A 3P	1 Miniature circuit breaker 32A 1P	1 Miniature circuit breaker 32A 1P
SIZE	**SIZE**	**SIZE**
315X290X850mm (L×W× H)	305X290X465mm (L×W× H)	305X290X465mm (L×W× H)
P / N	**P / N**	**P / N**
TYP38SP	TYP33PP-1	TYP33PP-2
IP rating: IP44	IP rating: IP44	IP rating: IP44

New patent design to overturn your experience

STRONG AND DURABLE

坚固耐用、质量保证

- Rubber material, super strong strike resistance, low to minus 40°C environment.
- Multi-layer superimpose, patent design, break the space limitation.

Convenient lock, easy opening and closing

Built-in switch, fully use of space

Special designed handle, elegant and strong,
cable can be stored over the handle, which is convenient!

One-piece hinge, can open and close separately

Steel casters, durable, energy saving

Rubber socket box: can be used directly after access to the power supply

Hinge on the back side, switch inside the box, can be seen after open the lid.
For more information, please contact us or go to www.weipu.cn.

IP44

SOCKET	SOCKET	SOCKET
4 civilian socket 16A 230V 6 TYP5101 16A 230V	4 civilian socket 16A 230V 6 TYP5624 16A 230V	4 civilian socket 16A 230V 6 TYP5824 32A 380V
PROTECT	**PROTECT**	**PROTECT**
2 Miniature circuit breaker 32A 1P 6 Miniature circuit breaker 16A 1P	4 Miniature circuit breaker 16A 1P 6 Miniature circuit breaker 16A 3P	4 Miniature circuit breaker 32A 1P 6 Miniature circuit breaker 32A 3P
SIZE	**SIZE**	**SIZE**
320X320X320mm (long x wide x high)	320X320X320mm (long x wide x high)	320X320X320mm (long x wide x high)
P / N	**P / N**	**P / N**
TYP32321	TYP32322	TYP32323

Single-layer box, without handle and castor

Rubber socket box: can be used directly after access to the power supply

Hinge on the back side, switch inside the box, can be seen after open the lid.
For more information, please contact us or go to www.weipu.cn.

IP44

SOCKET	SOCKET	SOCKET
8 civilian socket 16A 230V 6 TYP5101 16A 230V 4 TYP5624 16A 380V	8 civilian socket 16A 230V 4 TYP5624 16A 380V 4 TYP5824 32A 380V	12 civilian socket 16A 230V 6 TYP5101 16A 230V 4 TYP5624 16A 380V 4 TYP5624 32A 380V
PROTECT	**PROTECT**	**PROTECT**
1 Miniature circuit breaker 125A 4P 7 Miniature circuit breaker 32A 1P 2 Miniature circuit breaker 32A 3P	1 Miniature circuit breaker 125A 4P 7 Miniature circuit breaker 32A 1P 2 Miniature circuit breaker 63A 3P	1 Miniature circuit breaker 125A 4P 6 Miniature circuit breaker 32A 3P 2 Miniature circuit breaker 63A 3P
SIZE	**SIZE**	**SIZE**
320X320X510mm (long x wide x high)	320X320X510mm (long x wide x high)	320X320X510mm (long x wide x high)
P / N	**P / N**	**P / N**
TYP32324M1	TYP32325M2	TYP32326H1

Multi-layer box, with handle and castor

Protection Grade

IP		IP		IK	
0		0		00	
1	50mm	1		05	0.2kg, 35cm
2	12mm	2	15°	06	0.5kg, 20cm
3	2.5mm	3	60°	07	0.5kg, 40cm
4	1mm	4		08	1.7kg, 30cm
5		5		09	5kg, 20cm
6		6		10	5kg, 40cm
		7	15cm		
		8	m, m		

All of the connectors are made according to IEC60309 standard equivalent to GB/T11918 , the color of the connector means the different voltage and frequency. It is safety because different plugs and sockets use different poles, diameters of poles and position to avoid mis-connection.

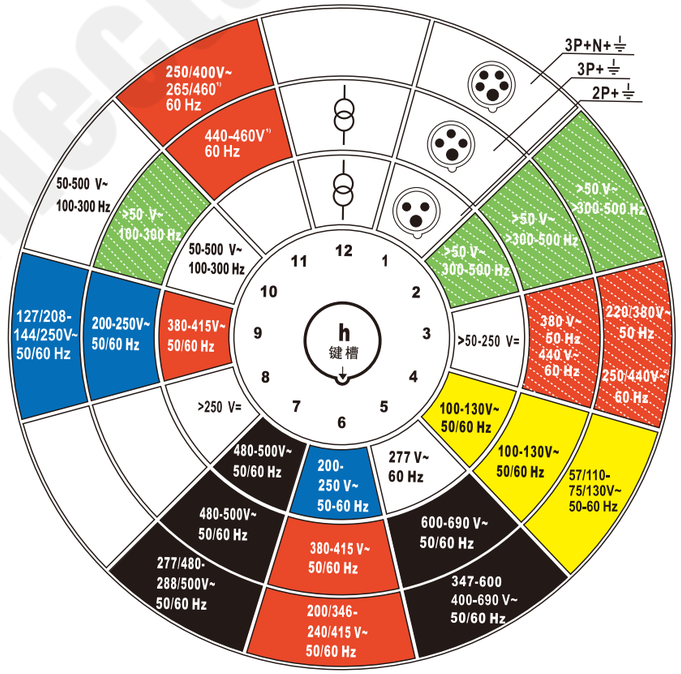

Sign:

~ AC

⎓ DC

behind transformer

Each product shows current, voltage, frequency, grounding and key way clearly. For example: 16-6h/380-415V~3P+⏚ means 16A current, grounding position is 6h, 380V-415V~voltage: 4poles.

The signs of grounding and key way on plugs are all match with involved receptacles.